Alex Jangro

Sophomore Mechanical Engineering Student
at CU Boulder

CU Hyperloop

- Tunnel Boring Club run by CU Boulder Students
- Every year we design, build, and compete with a ~12ft long, ~2ft diameter tunnel boring machine
- Competes in The Boring Company's "Not-A-Boring-Competition

My Role

- Mechanical Team Member - Tunnel Support (Sep 2024 – August 2025)
  - Worked as a member of the tunnel support team and worked to design and manufacture a cylindrical-axis 3D printer housed in the rear of the machine to print rings of tunnel as the machine dug
- Tunnel Support Lead (August 2025 – Present)
  - Leading the tunnel support sub team through the design, testing, and fabrication of a new HVAC duct-based tunnel support system that utilizes a passive release mechanism to simplify the system

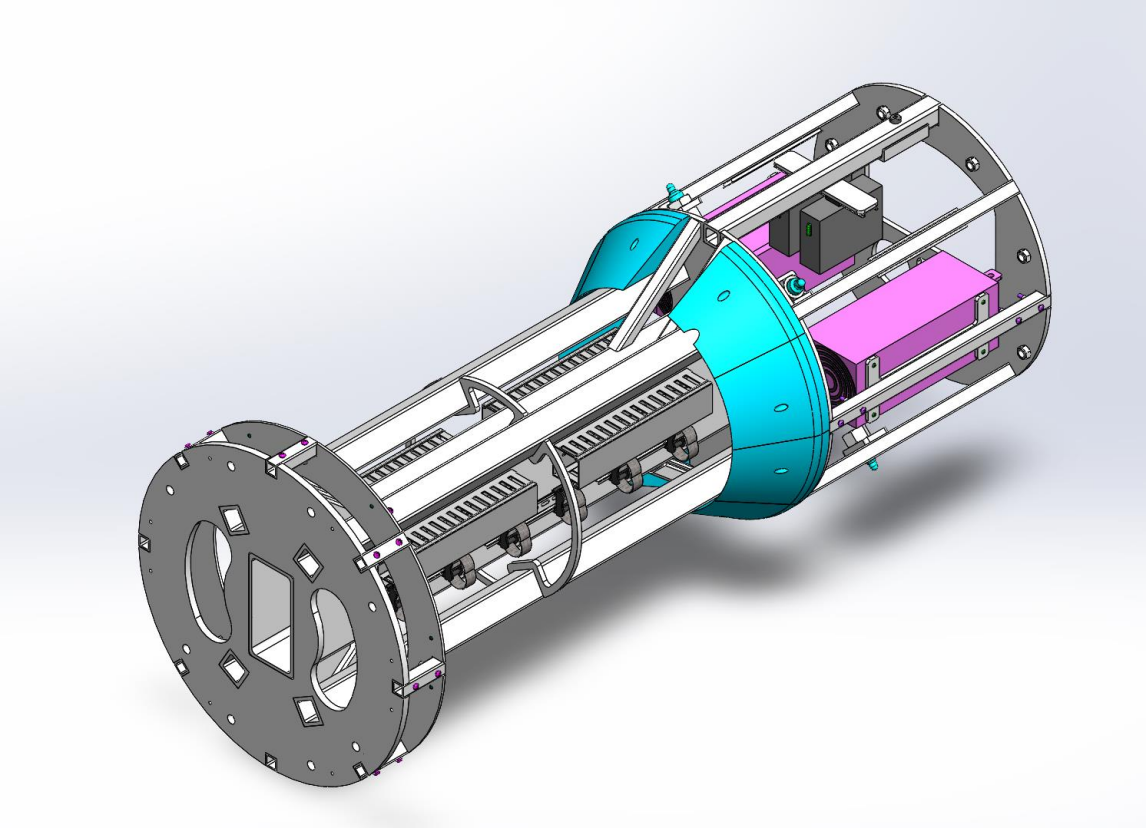

Mechanical Team Member

- Contributed heavily to the design of a brand-new cylindrical axis 3D printer for our tunnel support system
- Worked in SolidWorks to design the subsystem, designed z, r, and segment ejection systems
- Welded, cut, and ground steel parts for assembly
- Worked with electrical and software sub teams for integration and testing

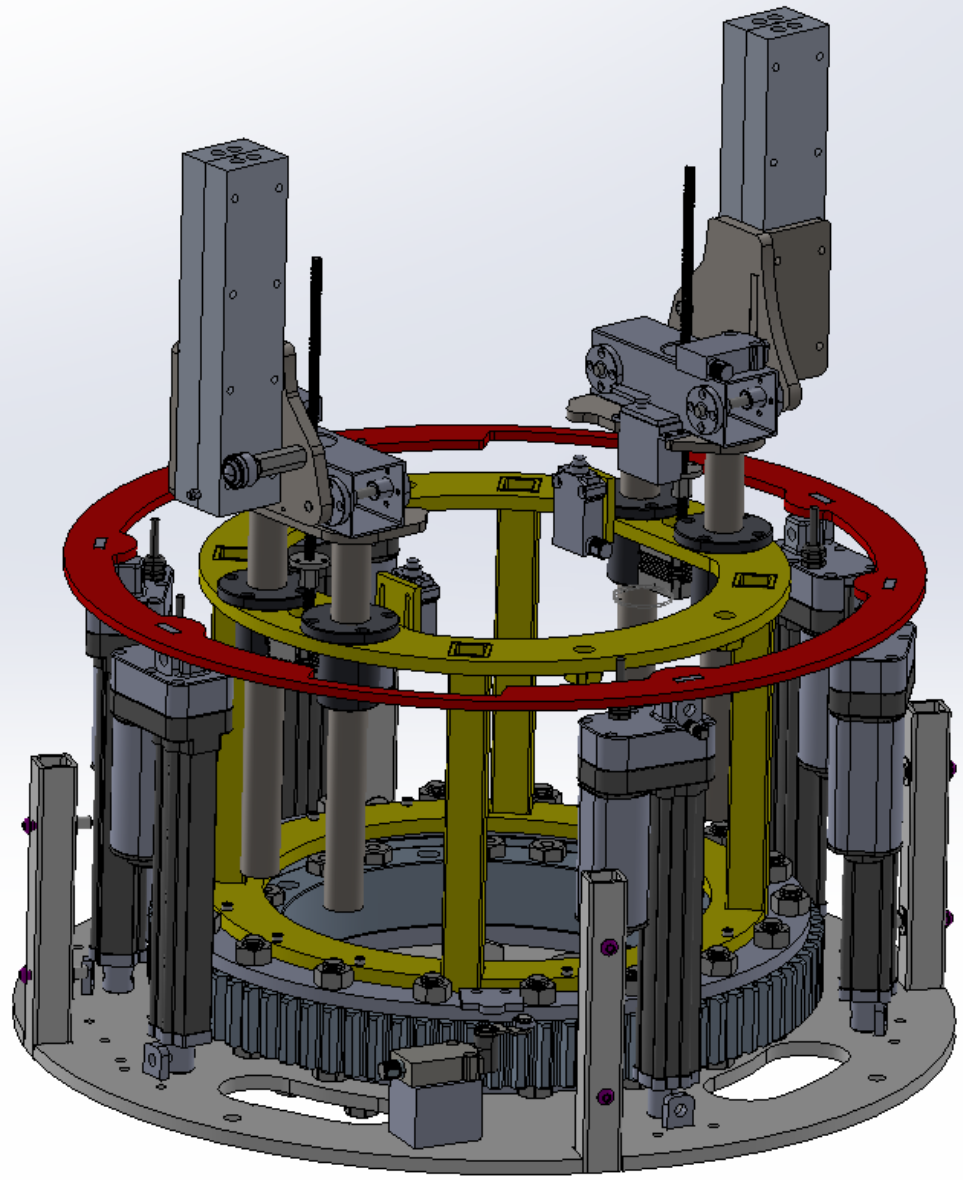

Tunnel Support Lead

- Led a small team through the design, testing, and currently the manufacturing of a brand-new HVAC duct-based tunnel support system
- Tested tunnel lining to confirm a FOS for regular soil pressures when mining
- Using Spring plungers as a passive release so system doesn't involve any active control, only the force of the machine moving to pull tunnel out of storage section
- Tested abrasion, spring plunger release, and mounting methods

Personal Projects

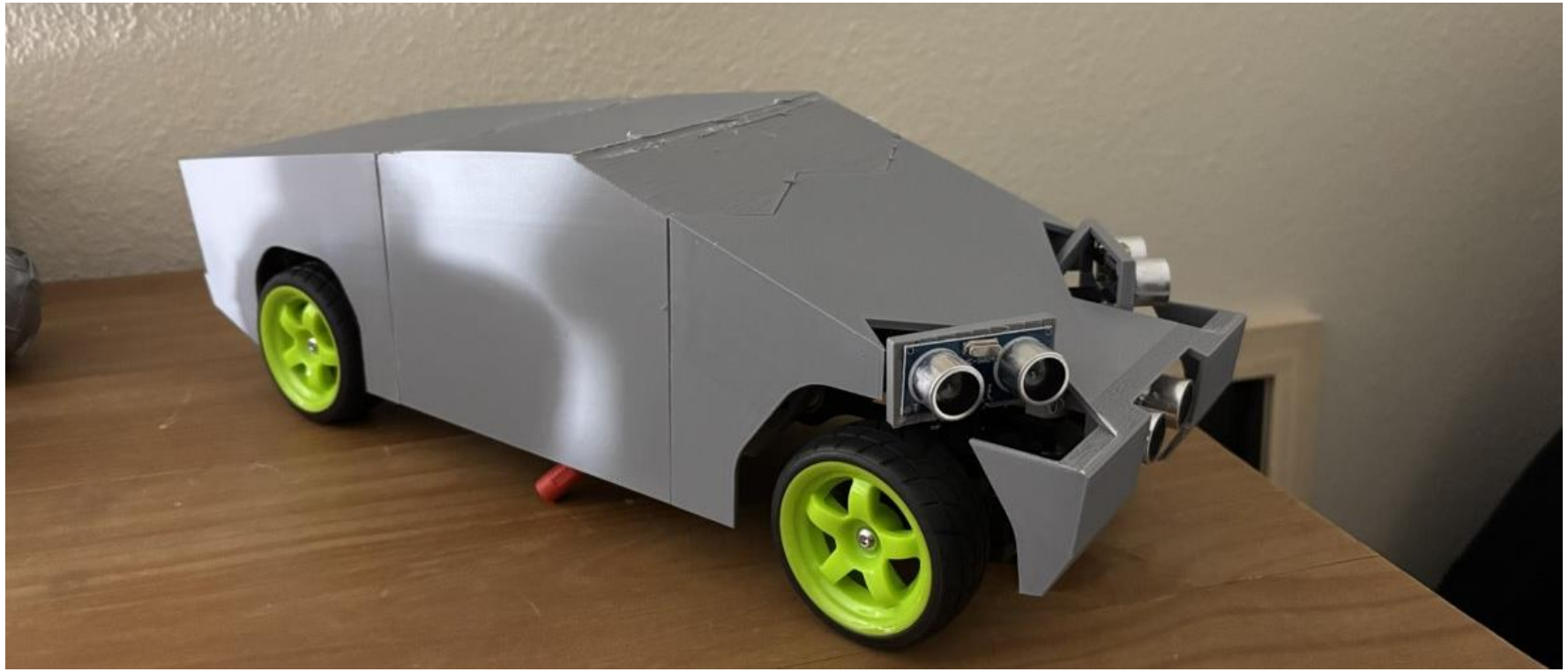

Autonomous Collision-Avoidance Car

- Personal project that started from motivation to get experience with both low-level and high-level wiring
- Fully 3D-printed to keep cost low and make iteration easy
- Created more versions as I gained experience and learned from mistakes

First Design

- Used a Raspberry Pi Pico and hosted a local webpage that allowed manual control from a device connected through wifi
- Powered from 12V LiPo battery converted down to 5V to power microcontroller and motors
- Servo-actuated steering in the front wheels

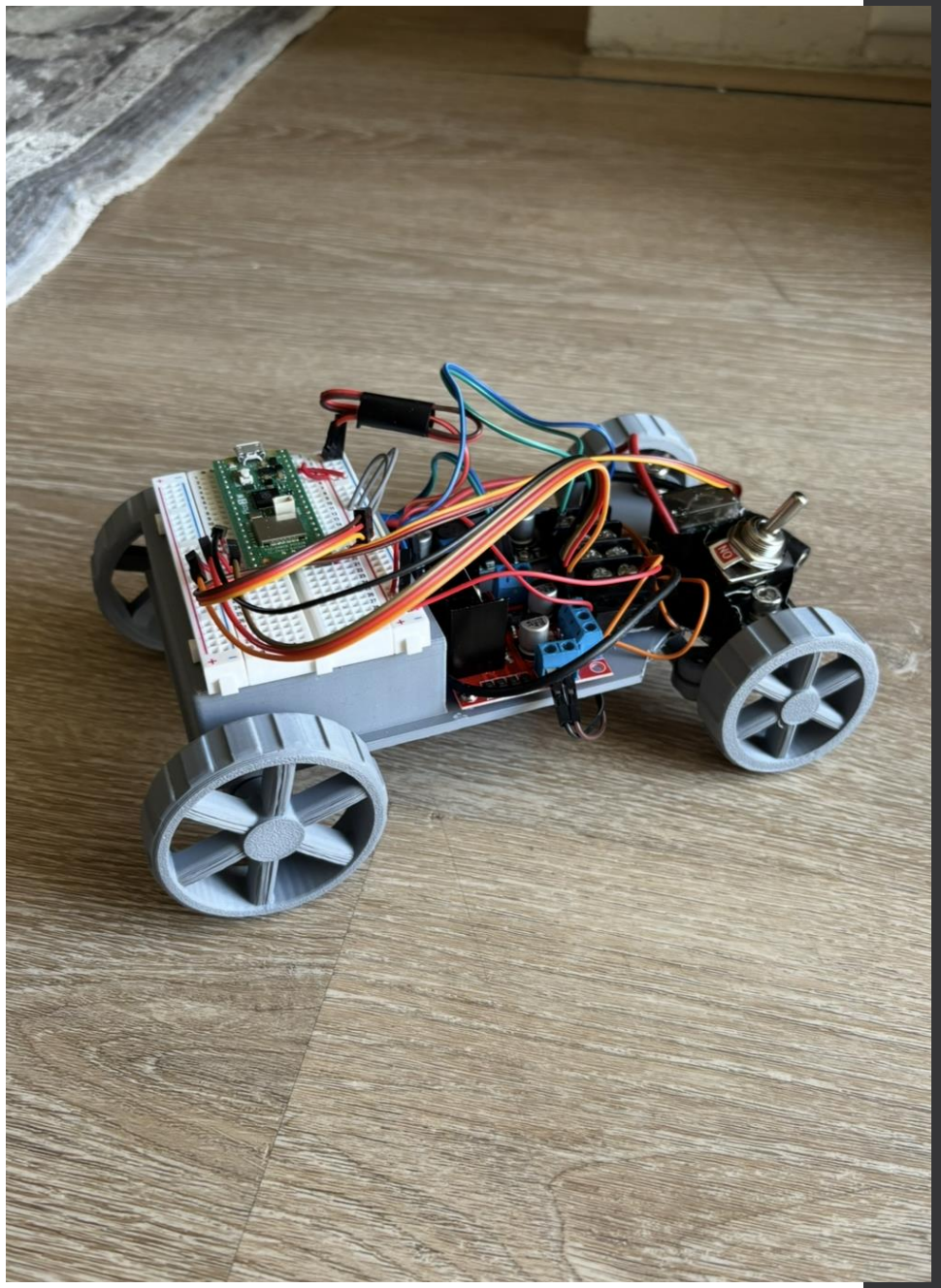

Final Design

- Leaned into autonomous driving by using ultrasonic sensors
- Switched voltage architecture up to 12V for motors to avoid pulling too much current from the 5V converter
- Utilized ESP32 for low cost and fast processing
- Still hosted a local webpage that allowed manual control and an autonomous mode
- Added passive suspension to front and back wheels for fun

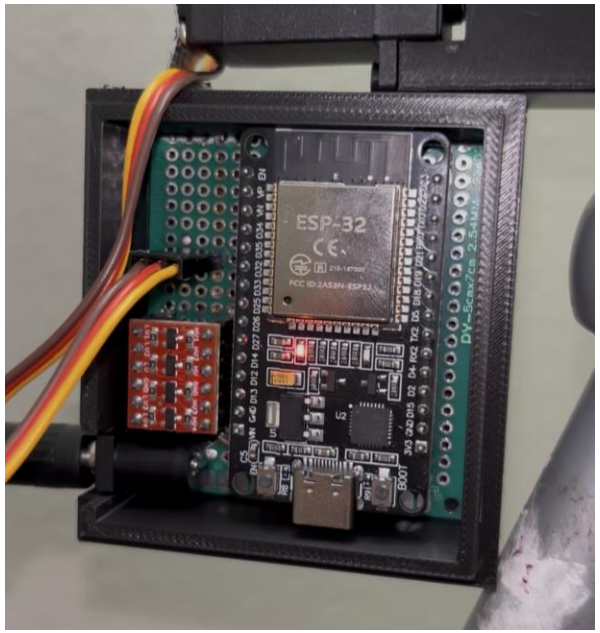

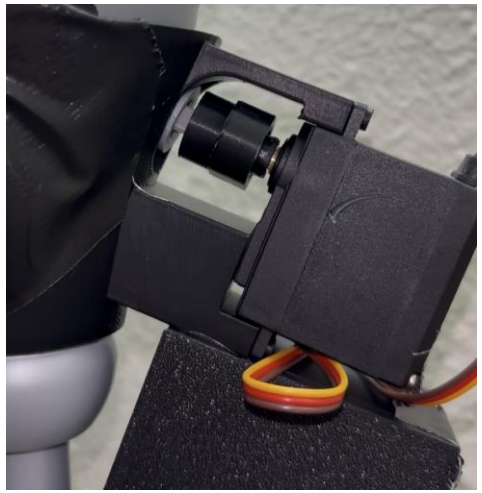

Alexa Controlled Lamp

- **The Project:** I fully automated a manual rotary-dial lamp by designing and 3D printing a custom servo motor housing to mechanically turn the switch.
- **The Hardware:** The system relies on an ESP32 microcontroller that I programmed to interface directly with the servo, allowing for precise physical adjustments to the lamp's dial.
- **The Software:** For seamless operation, I integrated the microcontroller with a smart home app and Amazon Alexa, enabling remote brightness adjustments and hands-free voice commands.

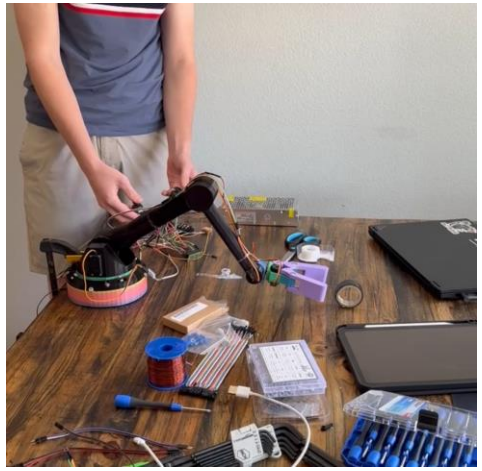

Servo Robotic Arm

- **The Project:** Over the summer, I designed from scratch, 3D-printed, and fully wired a functional, multi-axis robotic arm.
- **The Hardware:** The mechanics rely on cost-effective servo motors with varying torques, which are controlled by a Teensy 4.0 microcontroller and driven by a large 5V power supply.
- **The Controls:** To make the arm intuitive to operate, I programmed a joystick interface that translates inputs into a spherical coordinate system for smooth, accurate movement.

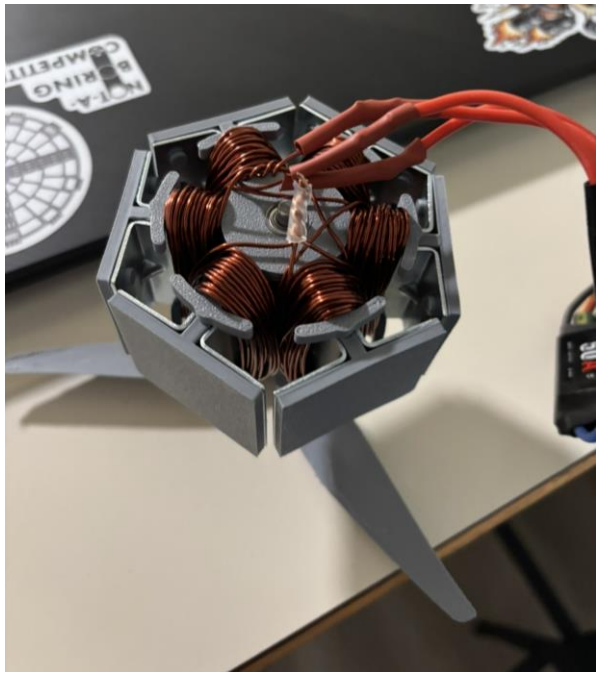

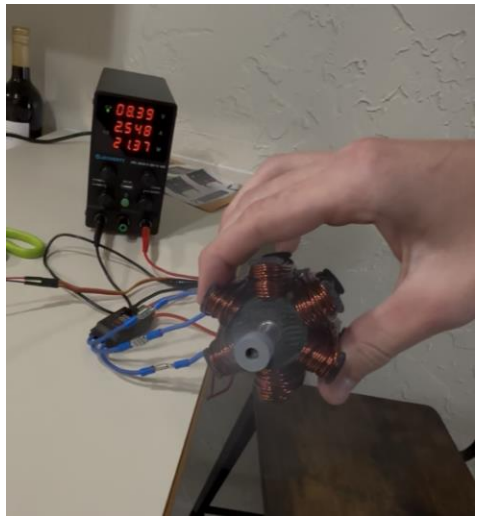

Homemade BLDC Motor

- **The Project:** I designed, 3D-printed, and assembled a fully functional brushless DC (BLDC) motor from scratch to gain hands-on experience with electromagnetism and electric motor mechanics.
- **The Hardware:** The motor features a custom 3D-printed housing with six hand-wound copper coils configured into three opposing pairs on the stator. The rotor utilizes neodymium magnets secured with super glue, and the entire system is driven by an off-the-shelf Electronic Speed Controller (ESC).
- **The Testing:** To validate the design, I mounted a propeller to the rotor to act as a mechanical load. During testing, the motor successfully drove the propeller, pulling ~2.5A at 8.5V and generating over 20 watts of continuous power.

Team Projects

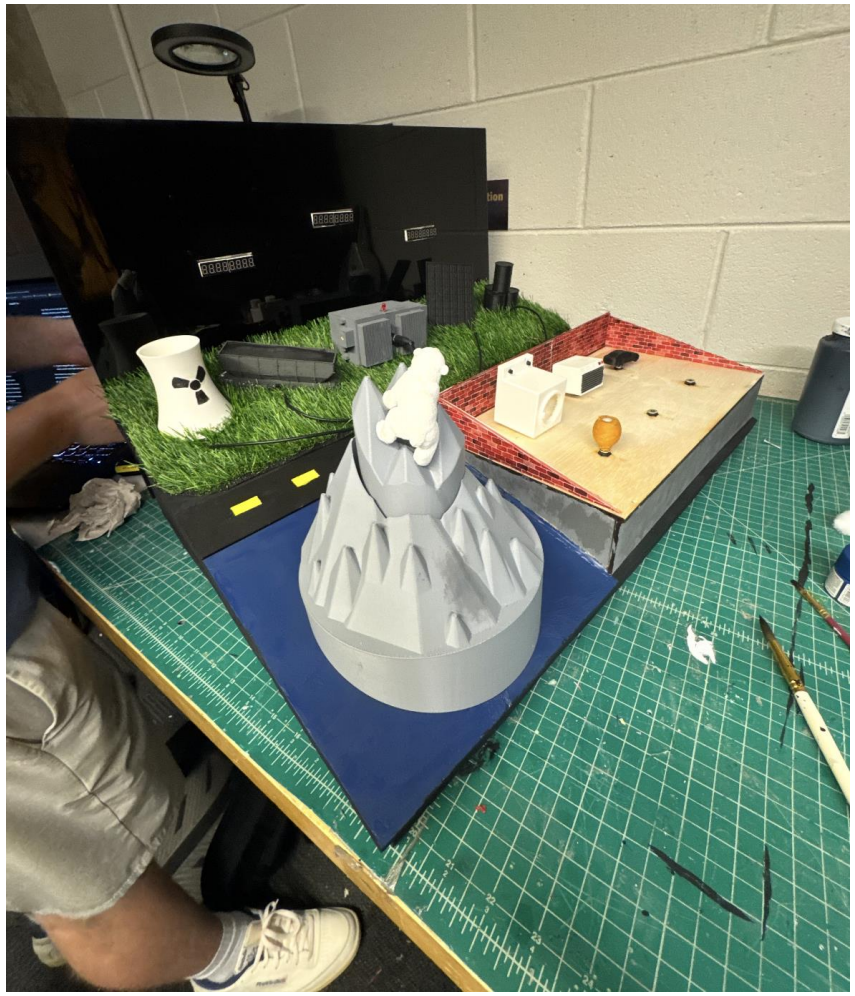

Interactive Energy Display

- **Led a 5-member engineering team** to develop an electromechanical educational display showcasing energy concepts, winning the CU Engineering Expo Sustainability Award.
- **Designed and implemented the complete electrical architecture**, successfully integrating DC motors, LEDs, physical switches, and voltage-divider circuits.
- **Developed all Arduino control firmware** and managed the seamless integration of the mechanical and electrical subsystems.

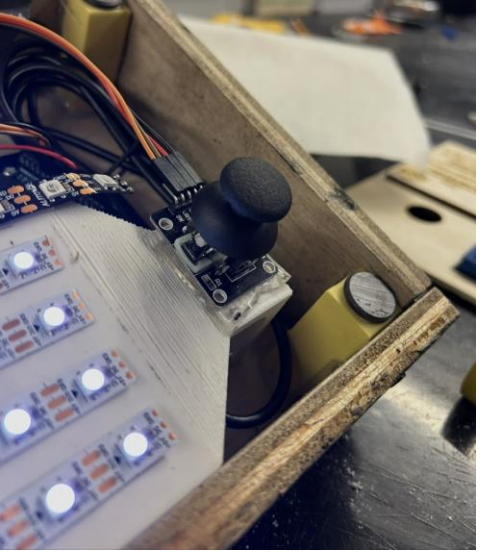

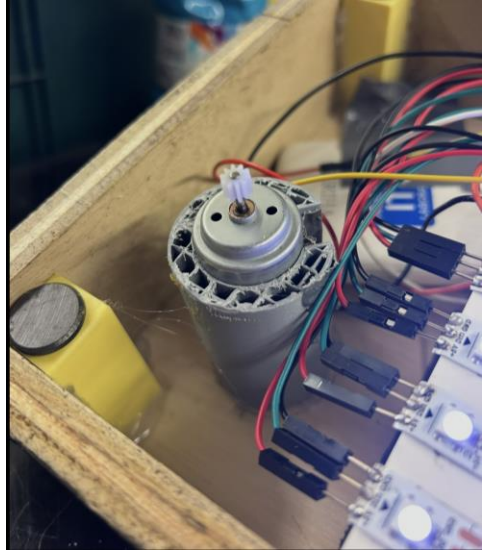

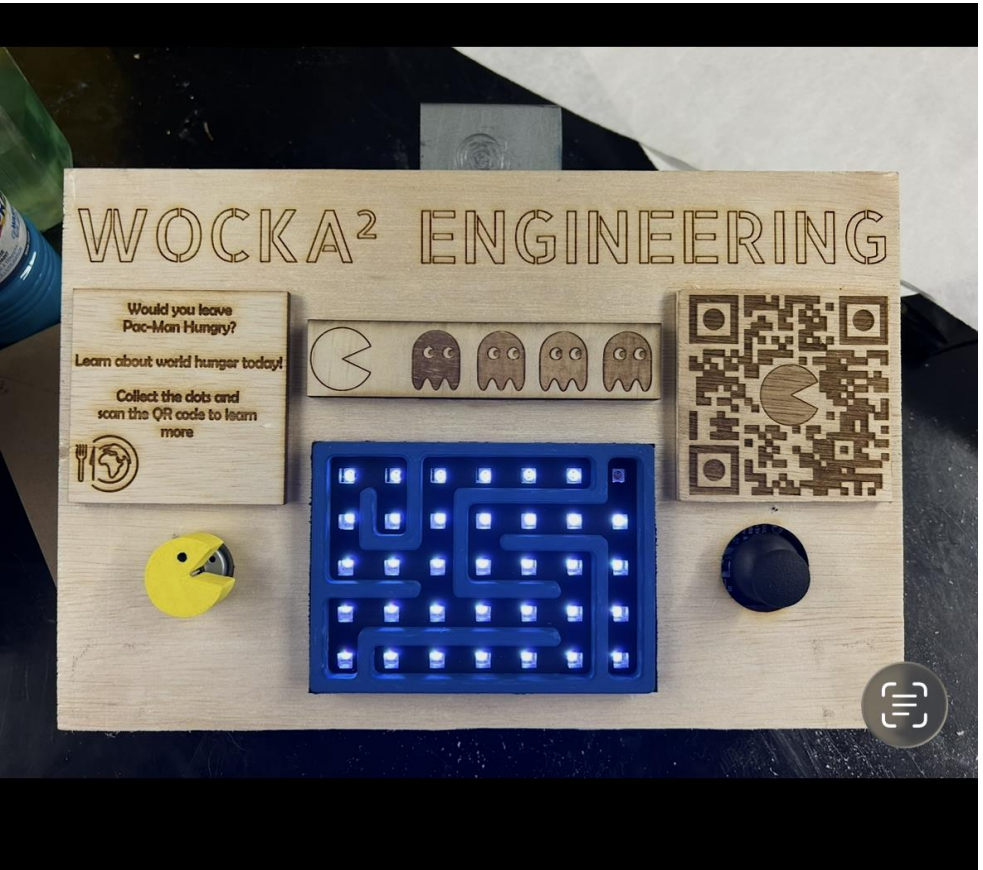

Interactive Billboard

- **Designed and engineered** an interactive, Arduino-powered billboard ("Wocka² Engineering") to gamify education and raise awareness for world hunger.
- **Programmed** a playable, matrix-based mini-game using addressable LED strips and C++, allowing users to navigate a blinking "player" LED through a physical maze via joystick input.
- **Integrated electromechanical components**, triggering a celebratory LED light sequence and a DC motor spin upon successful game completion.
- **Fabricated** the custom enclosure by combining laser-cut/engraved wood with 3D-printed components to house the microcontrollers and wiring.